MX24300

TRANSFORMER

OFFERS BOTH HARDWIRED AND PIG TAIL CONECTION

PIGTAIL CONNECTOR SOLD SEPARATELY

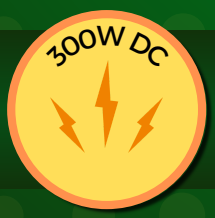

SPEC SHEET

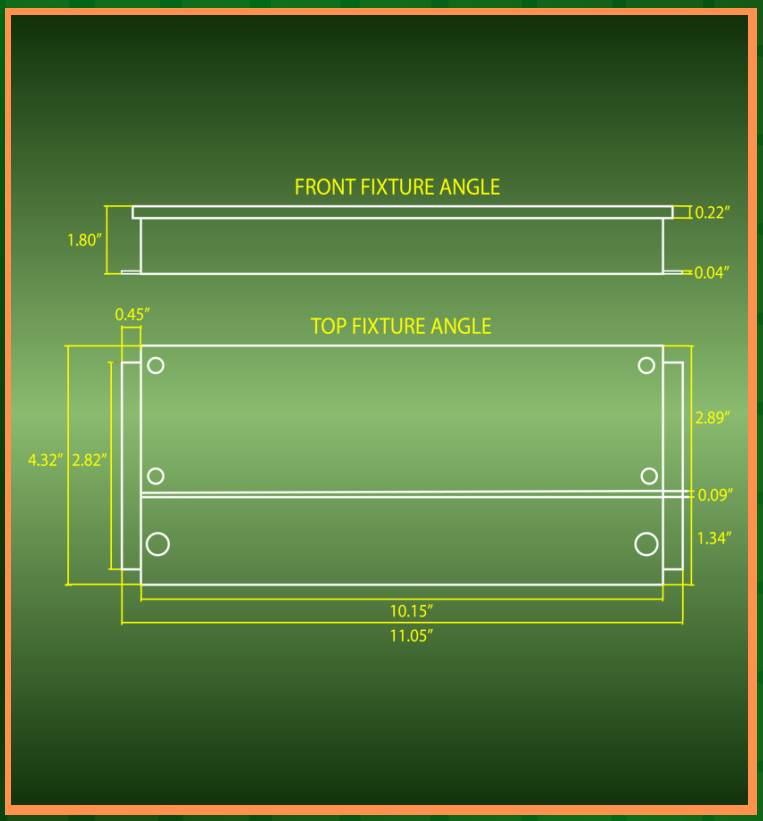

THE MX24300 IS A ROBUST AND EFFICIENT 300W DIMMABLE TRANSFORMER DESIGNED TO POWER YOUR 24V DC LIGHTING SYSTEMS. WITH SUPERIOR PERFORMANCE, DIMMING CAPABILITIES, AND SAFETY CERTIFICATIONS, IT'S THE IDEAL CHOICE FOR ENHANCING YOUR RESIDENTIAL OR COMMERCIAL LIGHTING SETUP.

THE MX24300 DIMMABLE TRANSFORMER COMBINES PERFORMANCE, DURABILITY, AND ENERGY EFFICIENCY, MAKING IT A DEPENDABLE CHOICE FOR POWERING MODERN LIGHTING SYSTEMS. ITS SMOOTH DIMMING CAPABILITY AND ROBUST SAFETY CERTIFICATIONS ENSURE AN UNPARALLELED USER EXPERIENCE.
ORDER THE MX24300 DIMMABLE TRANSFORMER TODAY AND TAKE YOUR LIGHTING PROJECTS TO THE NEXT LEVEL!

YOUTUBE VIDEO INSTALLATION GUIDE

WEBSITE

CATALOG

ABBA
LIGHTING USA
12 V Landscape Light Specialist

(800) 360-2960
ABBALightingUSA@gmail.com
7701 Alabama Ave, Canoga Park, CA 91304